This document hosted by: www.oldwillknottscales.com

MyWeigh®

# iBALANCE® i500™

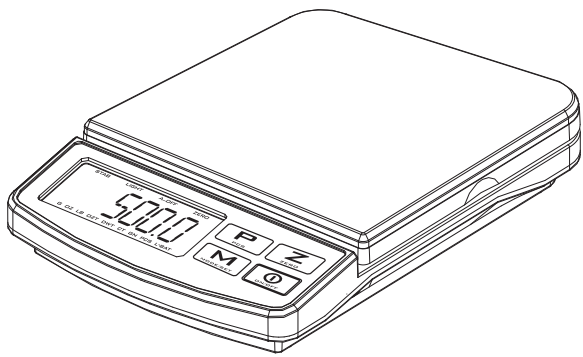

# USER MANUAL

iBALANCE®

# i500™

500g X 0.1g CAPACITY DIGITAL SCALE

MyWeigh®

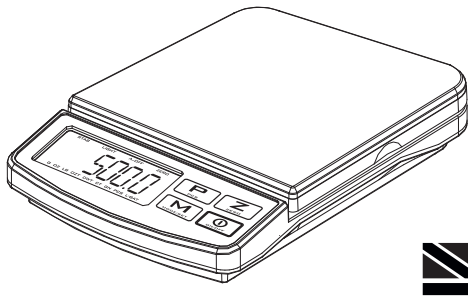

# USER MANUAL

ENGLISH

Thank you for purchasing the My Weigh® iBalance i500™ digital scale. Please read all operating instructions carefully before use. This electronic scale is a precision instrument. With normal care and proper treatment, it will provide years of reliable service. For more information please visit **www.myweigh.com**

Never load the scale with more than the maximal capacity. Although the iBalance i500™ is designed to be extremely durable with extra overload protection built into the case, overloading will permanently damage it! Avoid any exposure to extreme heat or cold, your scale works better when operated at normal room temperature. Keep your scale in a clean environment. Dust, dirt, moisture, vibration, air currents and/or a close proximity to other electronic equipment can all cause an adverse effect on the reliability and accuracy of your scale. Handle with care. Gently apply all items to be weighed onto tray top. Avoid shaking, dropping or otherwise shocking the scale. Scales are delicate instruments and unlike cellular phones, scales have delicate sensors that determine how much an item weighs. If you drop or shock your scale, these sensors "feel" the shock and are sometimes destroyed. This happens with all digital scales. We design our scales to be as resistant to shock or drops as possible, however there is no way for us to protect 100% against load cell or sensor damage.
Failure to follow these instructions will void your warranty.

Always allow the scale to acclimate to normal room temperature for at least one hour before use. Give your scale sufficient warm up time. Usually 30-60 seconds before calibration to give the internal components a chance to stabilize.

## PARTS DESCRIPTION

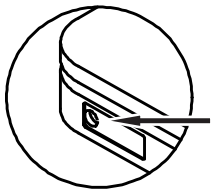

**LEFT SIDE >**
**AC ADAPTOR SOCKET**

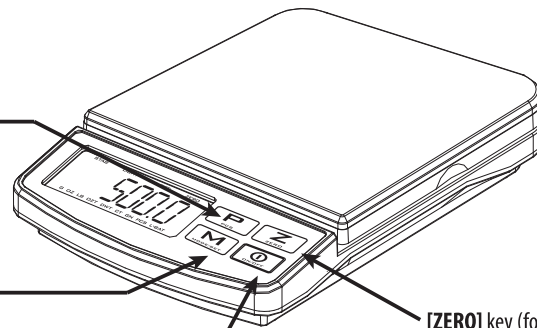

**[PCS]** Counting Mode

**[MODE/SET]**
Changes weighing units,
**g ,oz,lb, ozt, dwt, ct,gn**
or **pcs** (counting mode).

**[ON/OFF]**
Turns the scale power on/off.

**[ZERO]** key (for TARE)
Sets display to zero or
Subtracts weight of a container.

**DISPLAY STABLE INDICATOR**

**AUTO OFF** Function Indicator

**ZERO** Indicator

**Low Battery indicator**

**Weighing Unit**

## BATTERIES

Low Batteries & bad battery connections are the #1 cause of scale malfunction and inaccuracy! We test all of our scale returns from consumers and 60% of them are battery related problems. This sounds silly but it's true! A scale will perform poorly when it has low batteries. Use good quality batteries & replace them often ( Remove the batteries if you plan to store the scale for longer then 14 days). We include good quality batteries with all of our scales but they can run low in storage. If your scale simply won't turn on while on battery power, it is often caused by loose battery connections. Battery prongs (terminals) are made of metal and they have to be in contact with the batteries. You can use a paperclip to slightly bend the battery prongs to have a better connection. Some poorly designed batteries have recessed or partially obstructed battery terminals. This may cause your prongs to be touching the plastic housing of the battery instead of the metal of the battery terminal.

## BATTERY INSTALLATION

a) Press and lift open the battery cover located at the bottom of the unit.
b) Insert 6xAA batteries and make sure the polarity is correct (+) and ( - ).
c) Close the battery cover until it clicks shut.
Note : If the battery symbol appears in the display, it means low battery power. It is time to replace the battery. If the power is too low, it will show "Lo" when powered on and then it will turn off automatically.

## WEIGHING PROCEDURES

1. Place the scale on a flat hard surface.
2. Press **[ON/OFF]** to turn on the scale.
3. Select the weighing unit with **[MODE/SET]**.
Press **[MODE/SET]** to select a weighing unit g,oz ,lb,ozt ,dwt,ct,gn or pcs.
4. Gently place the items to be weighed on the scale platform.

## TARE/ZERO MODE

Tare can be used for eliminating the weight value of an empty container. Place an empty container on the scale and press ZERO. Then place the items to be weighed in the container. NOTE: When all weight is removed from the weighing tray, the tared value of a container will be displayed as a negative number. Press ZERO again to return the scale to zero.

## CALIBRATION

**When to calibrate - calibration is RARELY required.**
Calibration may be required when the scale is first set up for use, or if the scale is moved to a different altitude or gravitation. This is necessary because the weight of a mass in one location is not necessarily the same in another location. Also, with time and use, mechanical deviations can occur.

**How to calibrate**
****you must have an accurate 500 gram weight or combination of weights in order to calibrate****

1. The scale must be powered OFF. Press and hold **[MODE/SET]** first, then Press **[ON/OFF]** while pressing the **[MODE/SET]** button the display will show "CAL", then release both keys. Now the display will show an A/D value (a series of random numbers).
2. Wait 3 seconds, press **[MODE/SET]** the display will show the required calibration weight.
3. Place the required weight(s) on the platform. Wait a few seconds then press **[MODE/SET]**, the display will show "------"and then the A/D value. Calibration is complete, remove the weight(s).
4. Turn the scale OFF (Press the **ON/OFF** key) , then turn it back ON and check some weight readings. If calibration is still incorrect, repeat calibration but try it more slowly.

If calibration is repeatedly incorrect then: 1) Replace the batteries, 2) Try a more stable surface or vibration and interference free location, 3) Be sure there is no static electricity on the scale (use an anti-static spray to remove static electricity)

**FEATURES**

**Power Up Segment Test**
When first turning the unit on, the scale will run a quick diagnostic and it will display a countdown . This display will remain for a few seconds and then reset to zero.

**Overload indicator**
When the display shows "Err-0", this indicates an overload. Remove excessive load immediately.
Remember: you can permanently damage the scale and void your warranty by overloading it!

**Negative Value**
Any tared value will be displayed as a negative number once all weight is removed, press [ZERO] to re-zero the scale.

**Auto off**
An auto shut off feature is provided to conserve battery power. The unit will automatically turn off after 90 seconds of inactivity.

**To enable or diasable the auto-off setting:**
The scale should be OFF. Press and hold [ZERO] , then press and release [ON/OFF] the display will show A-ON or A-OFF. Press zero to toggle between the settings.

**A-ON** = Auto off enabled
**A-OFF** =Auto-off disabled

To confirm the setting and return to weighing mode turn the scale off and on again

**Weighmeter™:**

On the side of the display you will notice a series of bars that increase as the load on the scale increases. This is our Weighmeter™ invention. It helps you know the remaining capacity on the scale and also will indicate an overload if one occurs. Please use the Weighmeter™ to monitor your weighing loads and please do not overload this scale.

WEIGHMETER™ TECHNOLOGY

PATENT 7,256,358 - ADDITIONAL US/CA/EU PATENTS GRANTED OR PENDING

## COUNTING PROCEDURES

1. Press **[ON/OFF]** to turn on the scale. Wait for "0" to appear on the display.
2. Start the Count Procedure. If necessary, press **[ZERO]** key to set the display to "0".
3. Place a given number of samples of an item on the pan (the Sample Size should be either 10、20、50 or 100 pieces). The weight of these samples will show on the display.
4. Press the **[MODE]** key several times to put the scale in PCS mode (the indicator should be on pcs). Pressing the **[PCS]**, the display show P= XX
5. Select the sample size (the same as you chose above) by pressing the **[MODE]** key (press it as many times as necessary to put it in the correct sample size (the sample size is the same as in step three =10、20、50or100)
6. Press the **[PCS]** key, the display will show "PASS", then after 2 seconds, the scale will remember the sample size you selected and show the starting sample size on the display. (you can now remove the samples if you want to return the scale to 0)
7. Place the items that you want counted onto the tray and the total number of items will show on the display.
8. Press the **[MODE]** key to exit the counting function and return to normal weighing or you can press **[ON/OFF]** to turn the scale off . NOTE: the weight of unit sample > 10e.

****SPECIAL WARNING****

**Cell-Phones, Cordless-Phones, and any radio-frequency device can cause temporary interference and cause the scale to temporarily not work properly. Please do not use any electronic device near the i1200.**

| SPECIFICATIONS | | | |
|---|---|---|---|
| **Capacity** | 500g x 0.1g | **Units** | g ,oz,lb, ozt, dwt, ct,gn, pcs |
| **Auto-OFF** | | 90 sec | |
| **Scale dimension** | | 230 mm x 162 mm x 41 mm | |
| **Tray dimension** | | 148×148mm | |
| **Scale weight** | | 678g | |
| **Operating temperature** | | Optimum 10-40°C (50-104°F) | |
| **Power Source** | | 6 x AA Batteries / Adapter DC:9V/300mA/AC 100-240V | |
| **Tare Range** | | Up to scales maximum capacity | |

CE

**www.myweigh.com**

ADVANCED DIGITAL ADWT WEIGHING TECHNOLOGY · BACKLIT · STAINLESS STEEL TRAY · 6x AAA · AC ADAPTOR INCLUDED · AUTO-OFF ENERGY SAVING · PRECISION 0.1g · WEIGHMETER TECHNOLOGY