This document hosted by: www.oldwillknottscales.com

MyWeigh

# iBALANCE i601

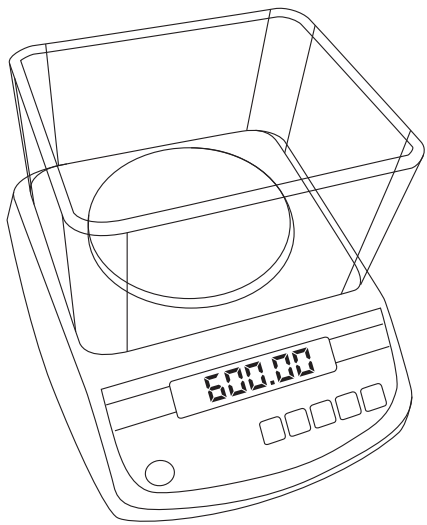


# USER MANUAL

# iBALANCE i601
# USER MANUAL

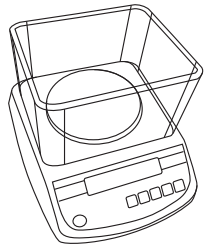

ENGLISH

Capacity
600g x0.01g
1.3lb x 0.001oz

Thank you for purchasing the My Weigh® iBalance® 601™ digital scale. Please read all operating instructions carefully before use. This electronic scale is a precision instrument. With normal care and proper treatment, it will provide years of reliable service. For more information please visit **www.myweigh.com**

Never load the scale with more than the maximum capacity. Although the iBalance® 601™ is designed to be extremely durable with extra overload protection built into the case, overloading will permanently damage it! Avoid any exposure to extreme heat or cold, your scale works better when operated at normal room temperature. Keep your scale in a clean environment. Dust, dirt, moisture, vibration, air currents and/or a close proximity to other electronic equipment can all cause an adverse effect on the reliability and accuracy of your scale. Handle with care. Gently apply all items to be weighed onto tray top. Avoid shaking, dropping or otherwise shocking the scale. Scales are delicate instruments and unlike cellular phones, scales have delicate sensors that determine how much an item weighs. If you drop or shock your scale, these sensors "feel" the shock and are sometimes destroyed. This happens with all digital scales. We design our scales to be as resistant to shock or drops as possible, however there is no way for us to protect 100% against load cell or sensor damage.

Failure to follow these instructions will void your warranty.

Always allow the scale to acclimate to normal room temperature for at least one hour before use. Give your scale sufficient warm up time. Usually 30-60 seconds before calibration to give the internal components a chance to stabilize.

## PRECAUTIONS BEFORE USING THE BALANCE

1. Matter charged with static electricity can affect accuracy. Discharge all static electricity. For example, one method is to use Static-Guard spray, and spray it on both sides of the weighing platform.
2. Before the initial use, please remove the protection screw. Re-install this screw before transport to help avoid possible damage.
3. The balance must be in an exactly horizontal position in order to achieve accurate measurement results. In order to bring the balance into a horizontal position, the adjustable feet are turned either clockwise or counter-clockwise until the air bubble on the front panel is in the center of the marked circle.
4. Please use an independent power outlet to avoid interference from other electrical appliances.
5. Don't put any object on the platform before powering on.
6. When possible please allow the scale to warm up for several minutes before operation.
7. Items should always be placed on the center of the platform when being weighed.
8. For optimum accuracy, recalibrate before each use.

## POWER SUPPLY

The i601™ is powered by **DC 6 V/1.5Ah NI-MH rechargeable sealed lead-acid battery** or directly by **9.0V 650mA power adapter.**

## OPERATION INSTRUCTIONS

### WEIGHING PROCEDURES

1. Place the scale on a flat hard surface.
2. Press **[ON/OFF]** to turn on the scale.
3. Select the weighing unit with .

Press to select a weighing unit g, ozt, ct, oz, dr, gn, dwt, lb, t, mm, tl.J, tl.T, tl.H, t, 1/8, 1/4

4. Gently place the items to be weighed on the scale platform.

### TARE

Tare can be used for eliminating the weight value of an empty container. Place an empty container on the scale and press . Then place the items to be weighed in the container. NOTE: When all weight is removed from the weighing tray, the tared value of a container will be displayed as a negative number. Press again to return the scale to zero.

## CALIBRATION

When to calibrate - calibration is RARELY required.

Calibration may be required when the scale is first set up for use, or if the scale is moved to a different altitude or new location. This is necessary because the weight of a mass in one location is not necessarily the same in another location. Also, with time and use, mechanical deviations can occur.

How to calibrate

**you must have an accurate 500g weight or combination of weights in order to calibrate**

1. Press and hold (do not release) and power the scale on with , release when the LCD shows "CAL".
2. Press again, it shows "000000". This is where you input the calibration weight you are going to use to calibrate (500 grams is recommended). Use to cycle through the 6 zeros shown on the screen and use on the selected digit to adjust selected digit. To calibrate using the recommended 500 grams, the screen must read "000500". Once this is set, place the 500 gram calibration weight on the tray.
3. Wait for 3 seconds, then press to finish the calibration process.

## COUNTING FUNCTION

1. Press , the display will show " 10 Cnr pcs" (means sample size is 10 pcs)
2. Press again and again, "10、" "20、" "50、" "100" pcs will appear in. Stop at the one you want to use.
3. Put the exact quantity of samples desired on the platform and press , the set sample size will appear.
4. Keep adding objects to be counted on the pan, the total number of the objects will be displayed. If the unit weight is too small for the counting resolution, the display will show "ErrPcS"

## WEIGHT RESPONSE SPEED AND DIVISION

The i601 allows you to adjust the scale reaction time and division selction.

1. Press and hold → (do not release) and power the scale on with ⏻. Wait until the display shows "nb0 - nb7" and release →
2. Press → again to select your response speed. (nb0: fastest, nb7 slowest) Press -0- to confirm.
3.You will now enter division selection. The display will show e.g "d 0.01". You can press → to select between ( d 0.01 to d 0.5) , and press -0- to confirm. The scale will return to normal weighing mode..

## RANGE OF ZERO TRACK AND ZERO DISPLAY SELECTION

Zero tracking enables high precision scales to compensate during wind fluctuations and vibrations. It is possible to adjust the level of assistance offered by zero tracking. To do this use the following steps:

1. Press and hold ⁂ (do not release) and power the scale on with ⏻. Wait until the display shows "0.5d. 1.0d. 1.5d. 2.0d 3.0d". Then press → to select the range of zero tracking and press -0- to confirm.
2. The display will then show "ZEr-S" or "ZEr-L" press → to select the zero display range. (ZEr-S means 0d and ZEr-L means ± 3.0d) Press -0- to confirm.
4. To select the baud rate press → , you can choose between 1200, 2400,4800 and 9600. Press -0- to confirm.
5. You can choose the communication method by pressing → (Co: send in succession, st: send steadily), press -0- to confirm. After that the scale will return to normal weighing mode.

## DATA TRANSMISSION – SERIES RS-232 INTERFACE (only for communication)

1. iBalance EIA-RS232 C's UART signal
2. Format
(1) Baud rate: 1200 bps 2400 bps 4800bps 9600 bps
(2) Data bits: 8 bits
(3) Parity bit: none
(4) Stop bit: 1 bit
(5) Code ASCII

**DATA FORMAT**:

| HEAD1 | HEAD2 | DATA | UNIT | CR |
|---|---|---|---|---|
| 1 2 3 | 4 5 6 | 7 8 9 10 11 12 13 14 | 15 16 17 18 19 | 20 21 |

HEAD1 (2BYTES)
OL - overload
ST - stable

HEAD2 (2BYTES)
NT - net weight mode
US - unstable

**DATA(8BYTE)**
2D (HEX) = "-"(negative sign) 20 (HEX) = " "(blank)
2E (HEX) = "."(decimal point)

**UNIT (4 byte)**

| | | | |
|---|---|---|---|
| g = 20 (HEX); | 20 (HEX); | 20 (HEX); | 67 (HEX) |
| kg = 20 (HEX); | 20 (HEX); | 6B (HEX); | 67 (HEX) |
| ct = 20 (HEX); | 20 (HEX); | 63 (HEX); | 74 (HEX) |
| ozt = 20 (HEX); | 6F (HEX);7A (HEX); | | 74 (HEX) |
| CR = OD (HEX); | OA (HEX) | | |

**TRANSMISSION EXAMPLE**
stable net + 0.168 g

| HEAD, | HEAD, | DATA | UNIT | CR |
|---|---|---|---|---|
| ST, | NT | + 0.168 | g | OA, OD |

## SELECTING DESIRED WEIGHING MODES

There are 15 weighing modes which can be easily enabled or disabled for ease of use, to do this:

1. Press and hold ⟲ (do not release) and press and release the ON/OFF key. Release the ⟲ key a the end of the self test.
2. The display will show "SIn", press → to and choose "SIn" and press -0- to confirm(Be sure to select the"SIn" section.).
3. Then the display will show "On ×" or "OFF ×"("×" is unit); "On" means enable, "OFF" means disable . There are fifteen units preset, press ⟲ to toggle through the weighing modes and choose the desired unit. Choose "On" or "OFF" by pressing -0- and press → to confirm.
4. Then the scale will ask you to choose the default initial weighing mode. The display will show "init X" ( "X" is unit), press → to toggle and choose initial unit; press -0- to confirm.

## SCALE FEATURES

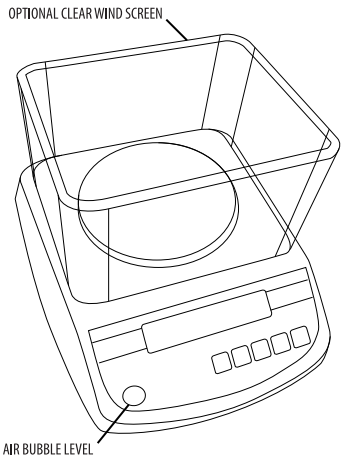


PROTECTION SCREW
on the left side of the scale

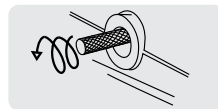

ADJUSTABLE FEET
on bottom of each corner of the scale

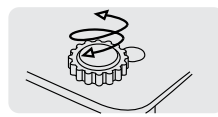

DATA TRANSMISSION PORT
on right side of the scale

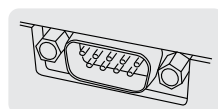

## KEYPAD FUNCTIONS

ON/OFF power switch.

SAMPLING & COUNTING.

UNIT(g , ozt or ct ) selection.

TARE is used to deduct the weight of an item or container. The symbol →T← will appear and reading will go to zero. Press it again to exit the tare mode (when empty), the tare indication will disappear.

ZERO is used to return the display to zero if a small weight reading is left while unloaded/empty.

## DISPLAY SYMBOLS

- →0← Scale is in ZERO mode.
- →T← Scale is in TARE mode.
- BATTERY needs recharging.
- The display reading is STABLE.
- **In charge** Scale is in the process of RECHARGE.
- **pcs** Scale is in COUNT mode.

## WIND SHIELD ASSEMBLY

1.

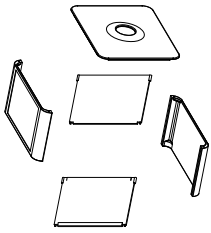

2.

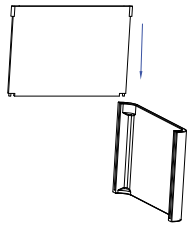

3.

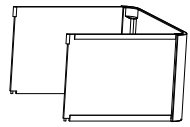

4.

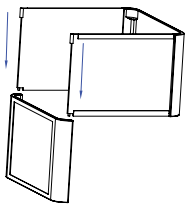

5.

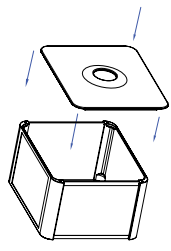

6.

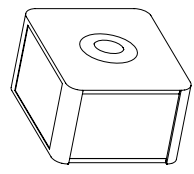

## DISPLAY UNITS

- **ct** CARAT
- **ozt** TROY OUNCE
- **g** GRAM
- **oz** OUNCE
- **lb** Pound
- **GN** GRAIN (UK)
- **dwt** PENNY WEIGHT
- **MM** MOMME (JPN)
- **tl.J** JEWELRY TAEL (HONG KONG)
- **tl.T** TAEL (TWN)
- **tl.H** TAEL (HONG KONG)
- **dr** DRAM
- **t** TOLA (INDIA)
- **1/8** 1/8 OUNCE
- **1/4** 1/4 OUNCE

| SPECIFICATIONS | | | |
|---|---|---|---|
| **Capacity** | 600g x 0.01g | **Units** | g, ozt, ct, oz, dr, gn, dwt, lb, t<br>mm, tl.J, tl.T, tl.H, t, 1/8, 1/4, pcs |
| **Scale dimension** | | 200mm x 240mm x 80mm | |
| **Tray dimension** | | 116mm diameter | |
| **Scale Weight** | | 1200g | |
| **Operating temperature** | | Optimum 10-40°C (50-104°f) | |
| **Power Source** | | Rechargeable Battery or 7.4V / 1.5A AC/DC power adaptor | |
| **Tare range** | | Up to scale's maximum capacity | |

BACKLIT · ADVANCED DIGITAL ADWT WEIGHING TECHNOLOGY · AUTO-OFF ENERGY SAVING · AC INCLUDED · STAINLESS STEEL TRAY · PRECISION 0.01g · CE