This document hosted by: www.oldwillknottscales.com

HD-SERIES

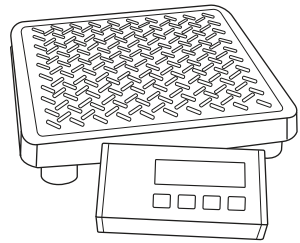

ENGLISH

Thank you for purchasing the My Weigh HD Series heavy duty shipping scale. This scale is designed to provide years of accurate weighing. Please read this entire manual before use. If you have any questions about your scale or have troubleshooting concerns, please visit our **website at www.MyWeigh.com.**

SPECIFICATIONS

Model	**HD150**	**HD300**
Capacity	68kg/150lb	136kg/300lb
Accuracy	0.02kg/0.05lb	0.05kg/0.1lb

POWER SUPPLY

The HD Series scale is designed to run with 6.0V / 100 mA AC power (ac adapter included) or optional 4x AA batteries. The AC adapter plugs into the socket on the rear of the scales weighing indicator. If you want to use batteries, please install them in the battery compartment on the underside of the base of the scale.

Battery Installation

For battery installation, turn over the scale, you'll see the battery compartment on the underside of the base of the scale , lift and open (see the enclosed drawing Fig1) the battery cover, remove and/or install the batteries. Be sure that the batteries are installed correctly following the polarity indicators in the battery compartment. Reinstall the battery cover.

OPERATION INSTRUCTIONS

Only operate the scale on a flat, level surface that is stable and durable enough to support the scale and the items being placed on the scale. Either place the remote display box together with the scale on its surface or mount the display box on a wall at a suitable height with the included wall mounting kit.

Weighing Procedures

Press the ⊙ key to turn on the scale, the display will show "150.00lb" for the HD150 shipping scale or "300.0lb" for the HD300 shipping scale. When the display will shows "0.00" thhe scale is now ready for use. To begin weighing, follow these steps:

1. Press and release the ⊙ key to set the scale's zero point. If you press and hold the key, then the scale will be turned off.
2. Press the **[M]** key to change the weighing unit between "lb" and "kg".
3. Press the **[T]** key to TARE or Zero the scale.
4. Press the **[D]** key to transmit the data through the USB port.

Display Messages

150.00: the scales maximum capacity is 150.00lbs, the scale is attempting to locate the proper zero position for accurate weighing.

300.00: the scales maximum capacity is 300.00lbs, the scale is attempting to locate the proper zero position for accurate weighing.

Err-Z: zero track range has exceeded

A.0FF.x: auto-off time

CAL-Er: calibration error

CAL-0: the indicator mark of calibration zero

CAL-F: the indicator mark of calibration full capacity

Err-0: overload

Err-S: unstable

Programming the Auto-off Time

1. Press down the **[D]** key until the indicator displays "A.OFF.X" (X=0.1.2.3.4.5.6.7.8.9 minutes), the display value "X" is the auto-off time, when the "X" value is "0", the auto-off function is disabled. NOTE: The default factory setting is X=0
2. To change the auto-off time press the **[M]** or **[D]** key; the X value will increase or decrease by 1, press the **[T]** key to confirm the auto-off time setting.
3. To exit the auto-off timer programming, press the ⊙ key, the display will then reset.

CALIBRATION

Calibration is only for ADVANCED USERS or scale technicians and should only be performed if absolutely necessary. There are two calibration methods available: one is using standard professional calibration weights, the other is the selection of different geographic location codes (gravity mode). The following is detail:

1. Press down the **[T]** key until the indicator displays **"GE.Uxx", "GE.oxx"** or **"GE. FAC"**; a. "**GE.Uxx"** means: USA geographic location code **"xx"** is selected; b. " **GE. FAC**" means: Factory geographic location code is selected; c. " **GE.oxx**" means: Other(except for USA and Factory) geographic location code **"xx"** is selected.

2. Press the **[M]** or **[D]** key to change the geographic location code; please refer the geographic location code table and maps at the end of the manual.

3. After selecting the appropriate geographic location code, press the **[T]** key, the scale will store your selection and display **"CAL-0"** or **"Go.on?"**(? is flashed).

If **"CAL-0"** is displayed, that means the scale must be calibrated once more by using standard weights and you should proceed to the next step;
If **"Go.on?"** is displayed and the ⊙ key is pressed, the scale will use the selected geographic location code and reset automatically to resume normal weighing mode;
If **"Go.on?"** is displayed and the **[T]** key is pressed, the scale will display **"CAL-0"** and you should proceed to the next calibration step.

4. Remove all weights from the scale platform, press the **[T]** key , the **"0"** in **"CAL-0"** will flash

5. After the reading (0.00) becomes stable, the scale will display **"CAL-F"**; place the correct standard weight(s) on the platform (60kg standard weight for HD150, 120kg standard weight for HD300), press the **[T]** key, the **"F"** in **"CAL-F"** will flash

6. After the readings (60.00 for HD150 or 120.00 for HD300) are stable, the indicator will display "**CAL-0**"; remove the weight(s) from the platform, press the **[T]** key; the **"0"** in **"CAL-0"** will flash, and then the display will reset after 2-3 seconds

Calibration is now complete.

GRAVITY MODE

The Gravity Mode feature provides a means of adjusting the scale's internal calibration factors to compensate for variations in acceleration due to gravity at different geographic locations. These differences can cause a given mass to indicate a slightly different weight at an end-users (local) site than it did at the Calibration (CAL) site.

The scale maintains two gravity setting values: one is local site gravity value; the other is calibration site gravity value. The scale will use the relationship between calibration and local gravity for its weight calculations.

We have compiled a list of local gravity values for some areas of the world. You only need select the index number of them according to the above step1 to step3. The latitude and altitude of your location both effect gravity and the calibration of your scale. It is important to select the proper code. If your location is not listed, select closest one. This kind of adjustment needs no calibration weights.

However, whenever possible, we **strongly** recommend that you calibrate the scale by using standard professional calibration weights.

Europe Geographic Location Codes

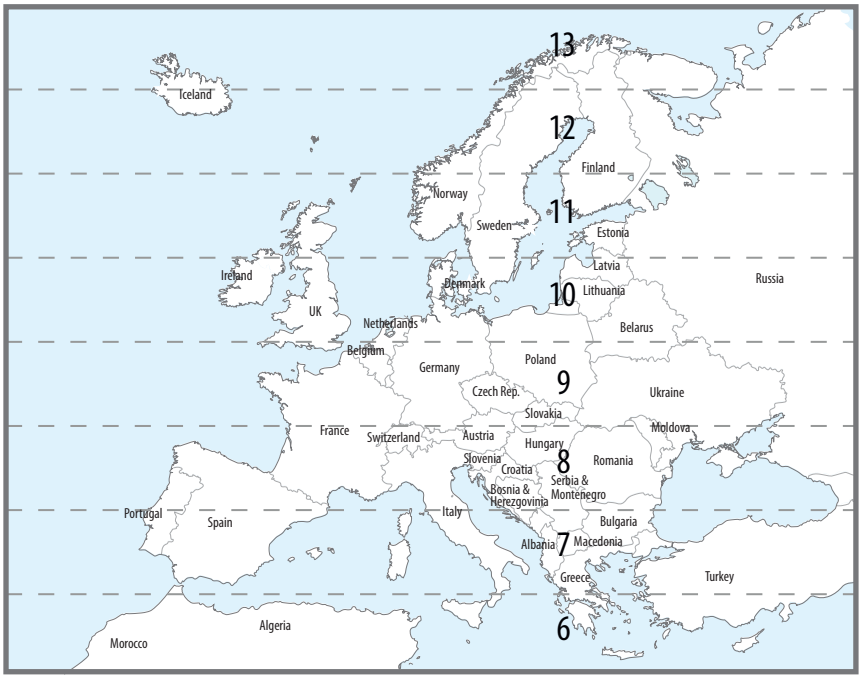

Country	Code
Albania	8
Andorra	8
Austria	9
Belarous	10
Belgium	10
Bosnia and Herzegovina	8
Bulgaria	8
Croatia	9
Czech Republic	9
Denmark	11
Estonia	11
Faroe Islands	12
Finland	12
France	
Lyon & North	9
South of Lyon	8
Germany	
Frankfort & North	10
South of Frankfort	9
Gibraltar	7

Country	Code
Greece	7
Holy See (Vatican City)	8
Hungary	9
Iceland	12
Ireland	10
Italy	8
Latvia	11
Liechtenstein	9
Lithuania	11
Luxembourg	9
Macedonia	8
Malta	7
Moldova	9
Monaco	8
Netherlands	10
Norway	12
Poland	10
Portugal	7
Romania	7

Country	Code
Russia	
Moscow & North	12
South of Moscow	10
Spain	
Madrid & North	8
South of Madrid	7
Serbia and Montenegro	8
Slovakia	9
Slovenia	9
San Marino	8
Sweden	
North of Stockholm	12
Stockholm & South	11
Switzerland	9
Ukraine	9
United Kingdom	
North of Newcastle	11
Newcastle & South	10

Canada Geographic Location Codes

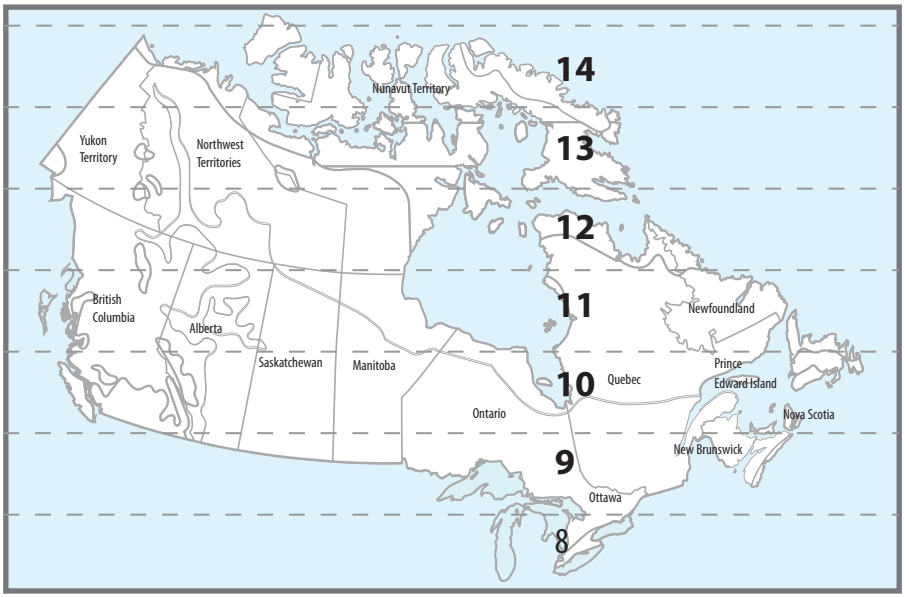

State	Code	State	Code
Alberta		**Prince Edward Island**	9
North of Edmonton	11	**Quebec**	
Edmonton & South	10	North of Schefferville	11
British Columbia		Between Schefferville & Sept-Iles	10
North of Prince George	11	Sept-Iles & South	9
Prince George & South	10	**Saskatchewan**	
Manitoba		North of Prince Albert	11
North of Norway House	11	Prince Albert & South	10
Norway House & South	10	**Northwest Territories**	
New Brunswick	9	Echo bay & North	13
Newfoundland		South of Echo bay	12
North of Hopedail	11	**Nunavut Territory**	
Between Hopedail & Fleur de lys	10	Victoria Island & North	14
Fleur de lys & South	9	Between Victoria Island & Baker Lake	13
Nova Scotia	8	South of Baker Lake	12
Ontario		**Yukon Territory**	
North of Nakina	10	North of Dawson	13
Nakina & South	9	Dawson & South	12

Illinois	
Bloomington & North	16
South of Bloomington	15
Indiana	
North of Indianapolis	16
Indianapolis & South	15
Iowa	
North of Des Moines	16
Des Moines &South	15
Kansas	15
Kentucky	14
Louisiana	12
Maine	18
Maryland	15
Massachusetts	17
Michigan	
Northwest of Lake Michigan	17
Southeast of Lake Michigan	16
Minnesota	18
Pennsylvania	16
Rhode Island	16
South Carolina	13
South Dakota	17
Tennessee	13
Texas	
Northeast of Colorado River	12
Southwest of Colorado River	11
Utah	13
Vermont	17
Virginia	14
Washington. DC	15
Washington State	18
West Virginia	15
Wisconsin	
Green Bay & North	18
South of Green Bay	17
Wyoming	
North of Casper	15
Casper & South	14

USA Geographic Location Codes

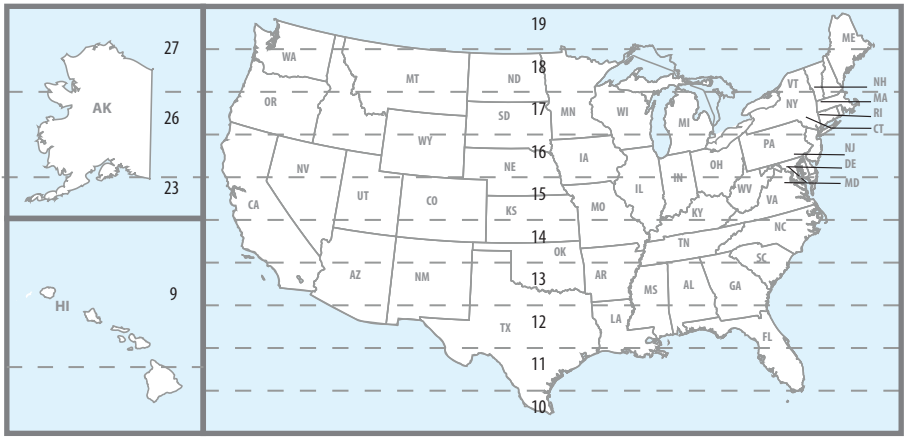

State	Code	State	Code
Alabama		**Mississippi**	
Birmingham & North	13	Kosciusko & North	13
South of Birmingham	12	South of Kosciusko	12
Alaska		**Missouri**	
North of Fairbanks	27	North of Springfield	15
Between Anchorage & Fairbanks	26	Springfield & South	14
South of Anchorage	23	**Montana**	
Arizona		Helena & North	18
Phoenix & North	12	South of Helena	17
South of Phoenix	11	**Nebraska**	15
Arkansas	13	**Nevada**	13
California		**New Hampshire**	17
Redding & North	16	**New Jersey**	16
Between Redding & Fresno	15	**New Mexico**	11
Fresno & Los Angeles	14	**New York**	
Los Angeles & South	13	Albany & North	17
Colorado		South of Albany	16
Denver & North	13	**North Carolina**	
South of Denver	12	Raliegh & North	14
Connecticut	16	South of Raliegh	13
Delaware	15	**North Dakota**	18
Florida		**Ohio**	
West Palm Beach & North	11	Akron & North	16
South of West Palm Beach	10	South of Akron	15
Georgia	12	**Oklahoma**	13
Hawaii	9	**Oregon**	
Idaho		Salem & North	18
North of Salmon River Mtns	17	Between Oakridge & Salem	17
South of Salmon River Mtns	16	South of Oakridge	16

CONNECTING THE HD-300 SCALE VIA USB

1. Connect the HD-300 scale to an available USB port on your computer.

2. Power on the scale.

SETTING UP THE HD-300 FOR USE WITH THE UPS WORLDSHIP SOFTWARE - USA/CANADA ONLY

**** Please note this function will not work in Europe****

1. Open the UPS Worldship software and click on **"tools"**.

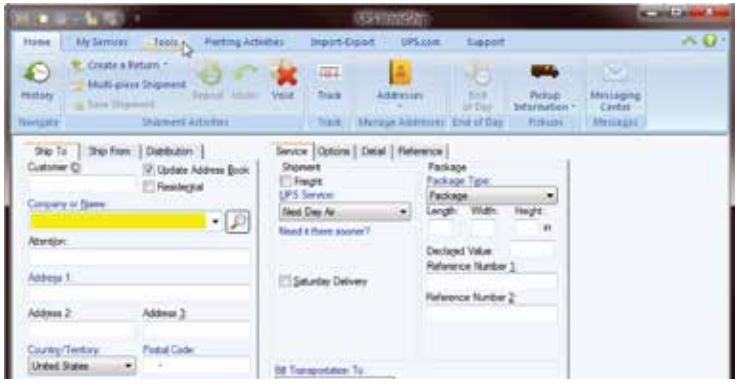

2. Click on **"System Preferences"**.

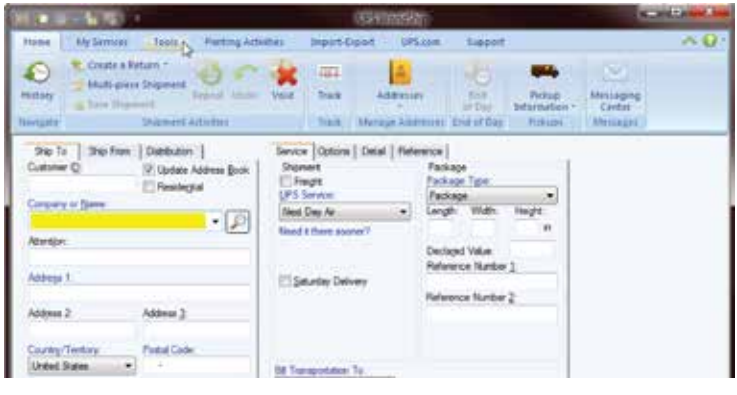

3. Click on **"Hardware"** in the drop-down menu.

4. Click on **"Scale Port"** drop-down menu and choose **"USB"**.

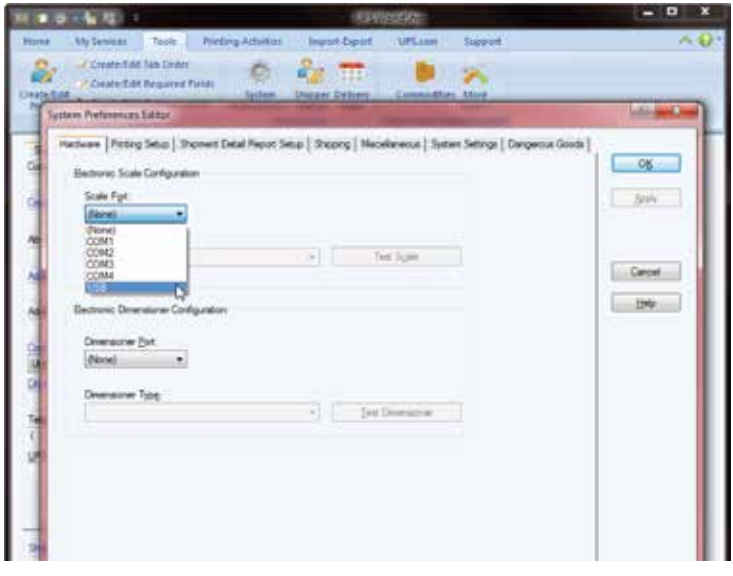

5. Click on **"Scale Type"** drop-down menu and choose **"Toledo PS60-5155 150lb Flat Top"**.

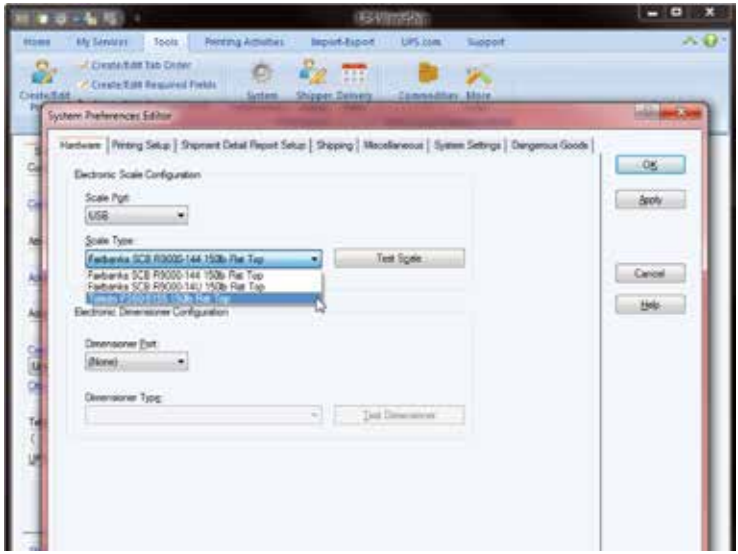

6. Click the **"Test Scale"** button.

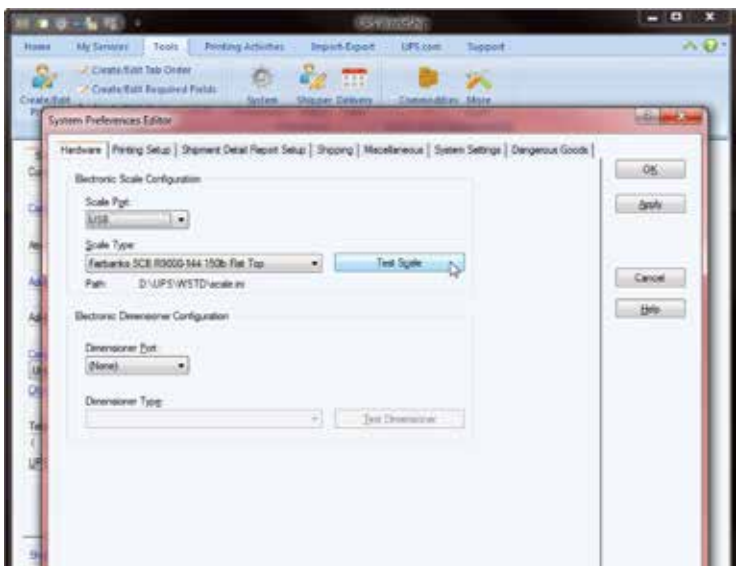

7. As you place an item on the scale, you will see the weight displayed in the **"weight"** field. After you have verified that the scale is displaying weight, click **"OK"** to exit this screen. On the next screen, click **"OK"** again to exit to the main screen.

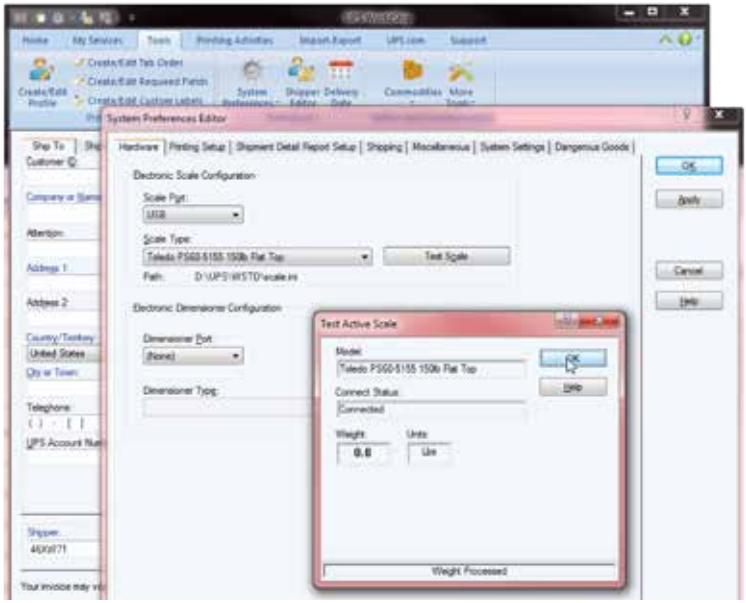

8. Finally, ensure that the box next to "Electronic Scale Activated" is checked. Your scale is now set up and ready to use.

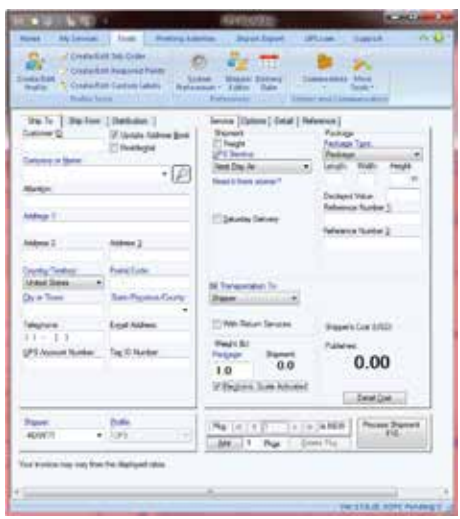

Fig1: Bottom view of the scale

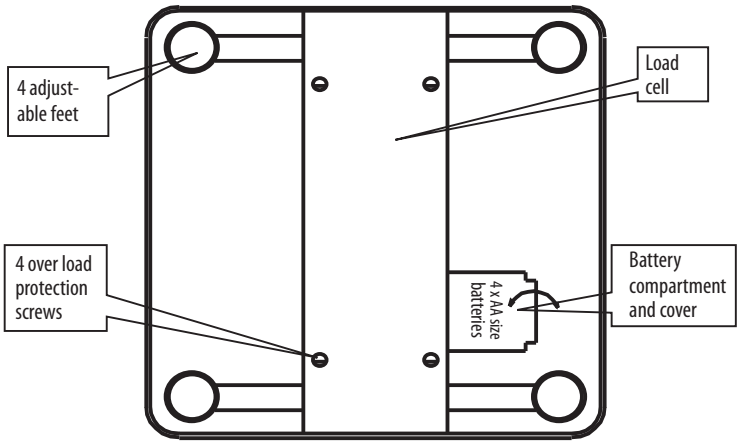

Fig 2: Indicator's outline and placement positioning

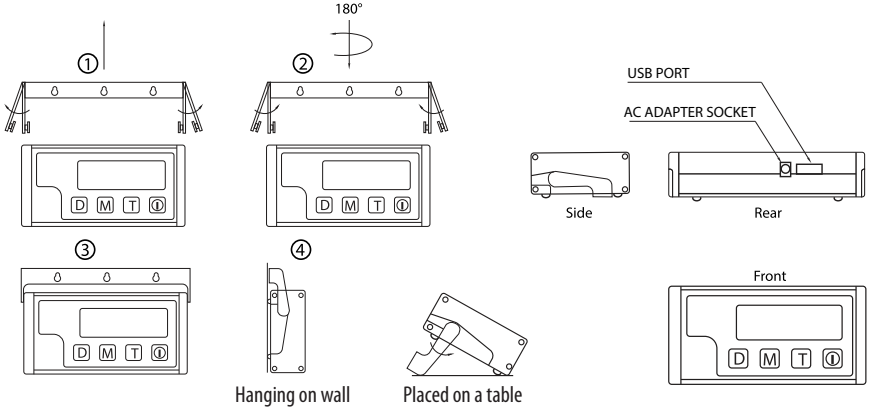

SPECIFICATIONS		
Model	**HD150**	**HD300**
Capacity	68kg/150lb	136kg/300lb
Accuracy	0.02kg/0.05lb	0.05kg/0.1lb
Units	lb, kg	
Platform dimension	355.5 x 355.5 x 63.5mm (14" x 14" x 2.5")	
Display dimension	165 x 82.5mm (6.5" x 3.25")	
Scale Weight	3.4kg	
Operating temperature	Optimum 10-40°C (50-104°f)	
Power Source	6.0V / 100 mA AC Power adaptor / 4 x AA Batteries	

CE

www.myweigh.com