This document hosted by: www.oldwillknottscales.com

CJ-SERIES

ENGLISH

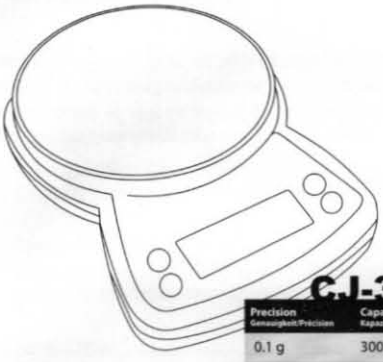

CJ-300

Precision Genauigkeit/Précision	Capacity Kapazität/Capacité
0.1 g	300 g
0.005 oz	12.346 oz
0.1 dwt	192.9 dwt

CJ-600

Precision Genauigkeit/Précision	Capacity Kapazität/Capacité
0.1 g	600 g
0.005 oz	11lb, 5.16oz
0.1 dwt	385.8 dwt

CJ-4000

Precision Genauigkeit/Précision	Capacity Kapazität/Capacité
0.5 g	4000 g
0.02 oz	141.1 oz
0.001 lb	8.8 lb

Thank you for purchasing the J-Scale® CJ digital scale. Please read all operating instructions carefully before use. This electronic scale is a precision instrument. With normal care and proper treatment, it will provide years of reliable service. For further information or troubleshooting, please visit our website at **www.jenningsscale.com**.

Never load the scale with more than the maximum capacity. Although the J-Scale® CJ is designed to be extremely durable with extra overload protection built into the case, overloading will permanently damage it! Avoid any exposure to extreme heat or cold, your scale works better when operated at normal room temperature. Keep your scale in a clean environment. Dust, dirt, moisture, vibration, air currents and/or a close proximity to other electronic equipment can all cause an adverse effect on the reliability and accuracy of your scale. Handle with care. Gently apply all items to be weighed onto tray top. Avoid shaking, dropping or otherwise shocking the scale. Scales are delicate instruments and unlike cellular phones, scales have delicate sensors that determine how much an item weighs. If you drop or shock your scale, these sensors "feel" the shock and are sometimes destroyed. This happens with all digital scales. We design our scales to be as resistant to shock or drops as possible, however there is no way for us to protect 100% against load cell or sensor damage. Failure to follow these instructions will void your warranty.

Always allow the scale to acclimate to normal room temperature for at least one hour before use. Give your scale sufficient warm up time.

PRECAUTIONS BEFORE USING THE BALANCE

1. Matter charged with static electricity can affect accuracy. Discharge all static electricity. For example, one method is to use Static-Guard spray, and spray it on the weighing platform.
2. Don't put any object on the platform before powering on.
3. Please allow the scale to warm up for several minutes before operation.
4. Items should always be placed on the center of the platform when being weighed.

POWER SUPPLY

AC Adapter

The scale can be powered by an AC adapter. Please only use the correct AC adapter for this scale – an incorrect AC adapter can cause damage to the scale and possible fire or injury. Use an incorrect AC adapter will also void your warranty.

Batteries

Low batteries & bad battery connections are the #1 cause of scale malfunction and inaccuracy! We test all of our scale returns from consumers and 60% of them are battery related problems. This sounds silly but it's true! A scale will perform poorly when it has low batteries. Use good quality batteries & replace them often (Remove the batteries if you plan to store the scale for longer then 14 days). We include good quality batteries with all of our scales but they can run low in storage. If your scale simply won't turn on while on battery power, it is often caused by loose battery connections.

Battery installation

a) Press and lift open the battery cover located at the bottom of the unit.
b) Insert the batteries and make sure the polarity is correct (+) and (-).
c) Close the battery cover until it clicks shut.

OPERATION INSTRUCTIONS

Weighing Procedures

1.Press [⏻] to turn on the scale. When the power is turned on, the scale will countdown for a few seconds and "0.00" will appear on the display.
2.Press [MODE] to select a weighing unit. Once the unit has been selected, the selected unit will be displayed next to the weight value.

TARE

Tare can be used for eliminating the weight value of an empty container. Place an empty container on the scale and press [Z/T]. Then place the items to be weighed in the container. NOTE: When all weight is removed from the weighing tray, the tared value of a container will be displayed as a negative number. Press [Z/T] again to return the scale to zero.

COUNTING MODE

1. Use [MODE] to toggle the unit setting and select PCS mode.
2. Press [PCS] to toggle the sample size 10, 20, 50 or 100.
3. Place a sample amount (10pcs,20pcs, 50pcs or 100pcs) on the platform.
4. Press [MODE] and the display will show "CAL". You can now place the items that you want counted onto the tray and the total number of items will show on the display.
5. Press the [MODE] key to exit the counting mode and return to normal weighing.

CALIBRATION

The CJ-300 requires a 300 gram weight, the CJ-600 requires a 600g weight and the CJ-4000 requires a 4000g weight in order to calibrate. Calibration may be required when the scale is first set up for use, or if the scale is moved to a different altitude or new location. This is necessary because the weight of a mass in one location is not necessarily the same in another location. Also, with time and use, mechanical deviations can occur.

1. Turn the scale off and place on a flat, stable surface.
2. From the off setting press & hold the [Z /T] button for 5 seconds. The display will show the AD value (a series of random numbers).
3. Press [Z/T] again , the display will show "2ZERO" and display the correct calibration weignt.
4. Gently place the required calibration weight on the platform and wait 3 seconds
5. Press [Z/T] again , the display will show "CAL" and "PASS". Calibration is complete.
6. Remove the weight and turn the scale OFF and ON to return to normal weighing mode.

SCALE FEATURES

Power Up Segment Test

When first turning the scale on, the scale will run a quick diagnostic and it will display a countdown . This display will remain for a few seconds and then reset to zero.

Auto off

An auto shut off feature is provided to conserve battery power. The unit will automatically turn off after 2 minutes of inactivity.
To turn this setting on or off follow these instructions:

1. From the off setting press & hold the [MODE] button, then press the [⏻] button, release both keys. The display will show "A-ON" or "A-OFF".
2. Press [MODE] to toggle the seeting on or off.
3. Turn the scale OFF and ON to return to normal weighing mode.

Overload indicator

When the display shows " EEEEE", this indicates an overload. Remove excessive load immediately.
Remember: You can permanently damage the scale and void your warranty by overloading it!

Weightmeter™

On the side of the display you will notice a series of bars that increase as the load on the scale increases. This is our Weighmeter™ invention. It helps you know the remaining capacity on the scale and also will indicate an overload if one occurs. Please use the Weighmeter™ to monitor your weighing loads and please do not overload this scale.

Cover/Bowl

The scale comes with a a cover that also acts as a unique pouring bowl. Please keep your scale covered at all times when not in use to protect from damage.

SPECIFICATIONS

Capacity	**CJ-300:** 300g x 0.1g **CJ-600:** 600g x 0.1g **CJ-4000:** 4000g x 0.5g	**Units**	**CJ-300:** g, oz, dwt, pcs **CJ-600:** g, lb:oz, dwt, pcs **CJ-4000:** g, oz, lb, pcs
Auto-OFF		2 min.	
Scale dimension		210mm x 140mm x 40mm	
Tray dimension		135mm (diameter)	
Operating temperature		Optimum 10-40°C (50-104°f)	
Power Source		3 x AAA batteries or AC power adapter	
Tare range		Up to scale's maximum capacity	
Zero range		± 5% of max. capacity	

www.jenningsscale.com